MOBICON
Electronic Components

PRODUCT SPECIFICATION

MEC RESONATOR

FREQUENCY COMPONENTS

ZTT Series RESONATOR SPECIFICATION

This specifications is subject to change without notice.

MOBICON HOLDINGS LTD.		
Prepared By	Sign.	**Approved By**
Leo Wong		C.H. Wong

Reprinting and copying of this specifications without prior written permission from MOBICON HOLDINGS LTD are not permitted.

www. mobicon. com

MEC

CERAMIC RESONATOR SPECIFICATION

PART NO. : **ZTT36.0MX**

ELECTRICAL CHARACTERISTICS

1.	Oscillation Frequency (Fosc)	36.000 MHz ± 0.5%
2.	Resonant Impedance (Ro)	35 Ohm
3.	Temperature Coefficient of Oscillation Frequency	± 0.3% max. (-20°C ~ +80°C)
4.	Withstanding Voltage	100VDC 5 sec. max.
5.	Rating Voltage:	
	D.C. Voltage	6V
	A.C. Voltage	15Vpp
6.	Insulation Resistance	100 M Ohm min. @10V DC
7.	Operating Temperature	-20°C ~ +80°C
8.	Storage Temperature	-55°C ~ +85°C
9.	Aging Rate (Fosc)	± 0.3% max. for 10 years

MEASUREMENT

Measurement Condition

The reference temperature shall be 25°C ± 2°C. The measurement shall be performed at the temperature range of 5°C ~ 35°C unless otherwise the result is doubtful.

MEASUREMENT CIRCUIT AND EQUIPMENT

Oscillating frequency shall be measured by the standard test circuit.

Resonant impedance shall be measured by *HP8751A Network Analyzer*.

Mechanical Dimensions (Unit = mm)

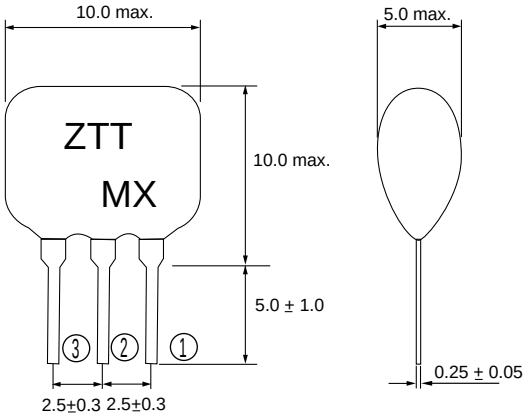

Test Circuit (C_1, C_2 = 5pF)

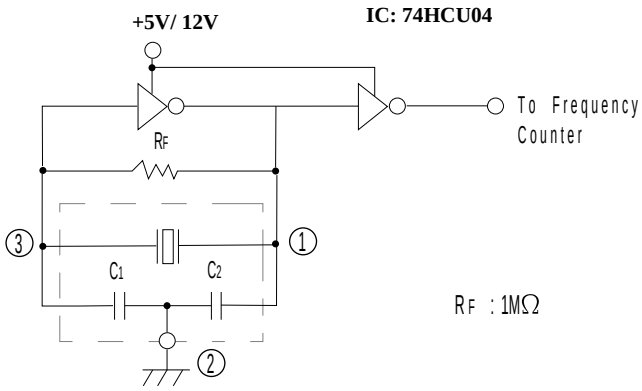

MOBICON Electronic Components

Prepared By: Leo Wong

DOC. No: ZTT36.0MX

MEC

CERAMIC RESONATOR SPECIFICATION

PHYSICAL AND ENVIRONMENTAL CHARACTERISTICS

No.	Item	Condition of Test	Performance Requirements
1	Humidity	Keep the resonator at 40 ± 2°C and 90~95% RH for 96 hours. Then release the resonator into the room condition for 1 hour prior to the measurement.	*It shall fulfill the specifications in Table 1.*
2	Vibration	Subject the resonator to vibration for 2 hours each in X, Y and Z axis with the amplitude of 1.5mm, the frequency shall be varied uniformly between the limits of 10~55Hz.	
3	Mechanical Shock	Drop the resonator randomly onto a concrete floor from the height of 100cm 3 times.	

4	High Temperature Exposure	Subject the resonator to 80 ± 5°C for 96 hours. Then release the resonator into the room conditions for 1 hour prior to the measurement.	*It shall fulfill the specifications in Table 1.*
5	Temperature Cycling	Subject the resonator to -20°C for 30 min. followed by a high temperature of 80°C for 30 min. cycling shall be repeated 5 times with a transfer time of 15 min. at the room condition. Then release the resonator into the room temperature for 1 hour prior to the measurement.	
6	Low Temperature	Subject the resonator to –20 ± 5°C for 96 ± 4 hours. Then release the resonator into the room conditions for 1 hour prior to the measurement.	
7	Resistance to Solder Heat	Dip the resonator terminals no closer than 2mm into the solder bath at 260 ± 10°C for 3 ± 0.5 sec.	
8	Solderability	Dip the resonator terminals no closer than 2mm into the solder bath at 235 ± 5°C for 3 ± 0.5 sec.	More than 95% of the terminal surface of the resonator shall be covered with fresh solder.
9	*Lead Fatigue* I) Pulling Test	Weight along with the direction of terminals without any shock 0.5kg for 10 sec.	The resonator shall show no evidence of damage and shall fulfill all the initial electric characteristics.
	II) Bending Test	Lead shall be subject to withstand against 90 degree bending at its stem. This operation shall be done towards both direction.	

TABLE 1

Item	Specification
Oscillation Frequency Change	$\triangle$F/ Fosc $\leqq$ 0.5% max.

MEC

REVIEW OF SPECIFICATIONS

1) When something get doubtful with this specifications, we shall jointly work to get an agreement.

2) This specification limits the quality of the components as a single unit. Please insure the component is thoroughly evaluated in your application circuit.

3) Please do not use this component in any application that deviates from its intended use as noted within the specification. It may cause any mishaps.

4) Please return one of this specification after your signature of acceptance. In case of no return within 3 months from submission date. This specification should be treated as accepted.

When using our products, the following precautions should be taken.

(1) Safety designing of apparatus or a system allowing for failures of electronic components used in the system

In general, failures will occur in electronic components at a certain probability. MOBICON HOLDINGS LTD makes every effort to improve the quality and reliability of electronic component products. However, it is impossible to completely eliminate the probability of failures. Therefore, when using MOBICON HOLDINGS LTD electronic component products, systems should be carefully designed to ensure redundancy in the event of an accident which would result in injury or death, fire, or social damage, to ensure the prevention of the spread of fire, and the prevention of faulty operation.

(2) Quality Level of various kinds of parts, and equipment in which the parts can be utilized

Electronic components have a standard quality level unless otherwise specified.

(3) This specifications is subject to change without notice.

The contents of this specifications are based on data which is correct as of 2002, and they may be changed without notice. If our products are used for mass-production design, please enquire consult with a member of our company's sales staff by way of precaution.

(4) Reprinting and copying of this specifications without prior written permission from MOBICON HOLDINGS LTD are not permitted.

(5) Industrial Property Problems

In the event any problems associated with industrial property of a third party arising as a result of the use of our products. MOBICON HOLDINGS LTD assumes no responsibility for problems other than problems directly associated with the constitution and manufacturing method of the products.

MOBICON
Electronic Components

Prepared By: Leo Wong
DOC. No: Review of Spec