MOBICON
Electronic Components

PRODUCT SPECIFICATION

MEC CERAMIC RESONATOR

FREQUENCY COMPONENTS

ZTA-MT Series CERAMIC RESONATOR SPECIFICATION

MOBICON HOLDINGS LTD.		
Prepared By	Sign.	**Approved By**
Leo Wong		C.H. Wong

www. mobicon. com

MEC

CERAMIC RESONATOR SPECIFICATION

PART NO. : **ZTA 12.0 MT**

ELECTRICAL CHARACTERISTICS

1.	Oscillation Frequency (Fosc)	12.0 MHz± 0.5%
2.	Resonant Impedance (Ro)	- Ohm
3.	Temperature Coefficient of Oscillation Frequency	± 0.3% max. (-20°C ~ +80°C)
4.	Withstanding Voltage	100VDC for 5 sec. max.
5.	Rating Voltage:	
	D.C.	6V max.
	A.C.	15Vpp max.
6.	Insulation Resistance	100 MOhm min. @ 10V DC
7.	Operating Temperature	-20°C ~ +80°C
8.	Storage Temperature	-30°C ~ +85°C

MEASUREMENT

Measurement Condition

The reference temperature shall be 25°C ± 2°C. The measurement shall be performed at the temperature range of 5°C ~ 35°C unless otherwise the result is doubtful.

MEASUREMENT CIRCUIT AND EQUIPMENT

Oscillating frequency shall be measured by the standard test circuit.

Resonant impedance shall be measured by *HP8751A Network Analyzer*.

Mechanical Dimensions (Unit = mm)

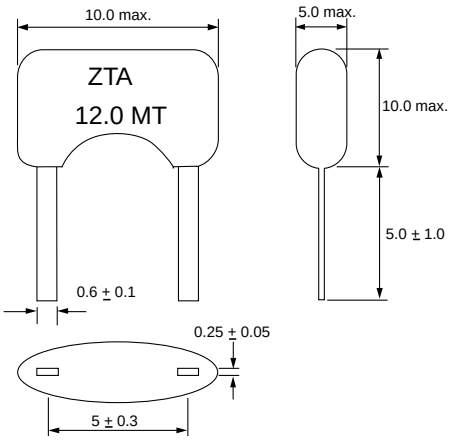

Test Circuit (C_1, C_2 = 30pF~33pF)

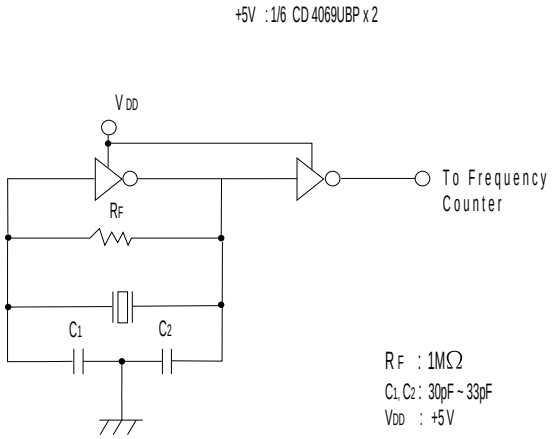

MOBICON
Electronic Components

Prepared By: Leo Wong
DOC. No: ZTA12.0MT

MEC

CERAMIC RESONATOR SPECIFICATION

PHYSICAL AND ENVIRONMENTAL CHARACTERISTICS

No.	Item	Condition of Test	Performance Requirements
1	Humidity	Keep the resonator at 40 ± 2°C and 90~95% RH for 96 ± 4 hours. Then release the resonator into the room condition for 1 hour prior to the measurement.	*It shall fulfill the specifications in Table 1..*
2	Vibration	Subject the resonator to vibration for 2 hours each in X, Y and Z axis with the amplitude of 1.5mm, the frequency shall be varied uniformly between the limits of 10~55Hz.	
3	Mechanical Shock	Drop the resonator randomly onto a concrete floor from the height of 100cm 3 times.	
4	High Temperature Exposure	Subject the resonator to 80 ± 5°C for 96 hours. Then release the resonator into the room conditions for 1 hour prior to the measurement.	
5	Temperature Cycling	Subject the resonator to -20°C for 30 min. followed by a high temperature of 80°C for 30 min. cycling shall be repeated 5 times with a transfer time of 15 sec. at the room condition. Then release the resonator into the room temperature for 1 hour prior to the measurement.	
6	Low Temperature	Subject the resonator to –20 ± 5°C for 96 ± 4 hours. Then release the resonator into the room conditions for 1 hour prior to the measurement.	
7	Resistance to Solder Heat	Dip the resonator terminals no closer than 2mm into the solder bath at 260 ± 5°C for 10 ± 1 sec.	

MOBICON Electronic Components

Prepared By: Leo Wong
DOC. No: ZTA-MT

8	Solderability	Dip the resonator terminals no closer than 2mm into the solder bath at 235 ± 5°C for 2 ± 0.5 sec.	More than 95% of the terminal surface of the resonator shall be covered with fresh solder.
9	*Lead Fatigue* I) Pulling Test	Weight along with the direction of terminals without any shock 1kg for 10 ± 1 sec.	The resonator shall show no evidence of damage and shall fulfill all the initial electric characteristics.
	II) Bending Test	Lead shall be subject to withstand against 90 degree bending at its stem. This operation shall be done towards both direction.	

TABLE 1

Item	Specification
Oscillation Frequency Change	$\Delta F/ Fosc \leqq 0.5\%$ max.
Resonant Impedance	$\Delta Ro \leqq 5$ Ohm

REVIEW OF SPECIFICATIONS

1) When something get doubtful with this specifications, we shall jointly work to get an agreement.

2) This specification limits the quality of the components as a single unit. Please insure the component is thoroughly evaluated in your application circuit.

3) Please do not use this component in any application that deviates from its intended use as noted within the specification. It may cause any mishaps.

4) Please return one of this specification after your signature of acceptance. In case of no return within 3 months from submission date. This specification should be treated as accepted.